SEWEROOTER JUNIOR

Parts List and Diagrams

CAT. NO.	DESCRIPTION
JR-100	Complete Frame Assembly (Serial No. 3988 & Over)
JR-101	Jr. Frame Only (Ser. #3988 & Up)
JR-102	Junior Wheel (1)
JR-103	Axle Shaft
JR-104	Extension Handle
JR-105	Extension Handle Grip
JR-106-1	Handle Locking Pin
JR-106-1-A	Handle Locking Knob
JR-106-1-B	Handle Locking Spring
JR-106-1-C	Handle Locking Bolt
JR-107	Extension Handle Mounting Plate
JR-108	Extension Handle Bolt
JR-109	Roll Pin (2)
JR-110	3/8" Allen Set Screws (Set of 8)
JR-112	Elec. Cord Holder (Ser.#3988 & Up)
JR-114	Belt Guard
JR-200-3	Comp. Distributor Tube Assembly (Serial #3988 through #28942)
JR-200-4	Comp. Distributor Tube Assembly (Serial #28943 & Over)
JR-201-C	Front Post & Cap(Ser. #3988 & Up)
JR-201-B-2	Distributor Cap Locking Knob
JR-202-2	Dist. Tube & Rear Collar Assy. (Serial #4120 to 28942)
* JR-202-3	Dist. Tube & Rear Collar Assy. (Serial #28943 & Over)
* JR-203	Front Collar
* JR-204	Rear Collar (Serial #28943 & Over)
JR-209-B	Rear Collar Locking Set Screw 3/8" (Serial #3988 to 28942)
JR-209-3	Rear Collar Locking Set Screw 1/8" (Serial #28943 & Over)
* JR-210	Distributor Tube Bushings (Set of 2)
SFJR	Spin-Feed Assembly Only (Serial #4131 & Over)
SFJR-1	Spin-Feed Base (Ser. #4131 & Up)
SFJR-2	Spin-Feed Gear (Ser. #4131 & Up)
SFJR-3	Spin-Feed Pulley **Discontinued** (Use SFJR-3-2)
SFJR-3-2	Spin-Feed Pressure Arm
SFJR-6	Complete Crank Handle
SFJR-7	Handle Locking Collar
SFJR-8	Thumb Screw
SFJR-9	Wing Nut
SFJR-10-1	1/2" x 1-3/4" Hex Head Cap Screw with Lock Nut
SFJR-11	5/16" x 3/8" Allen Set Screws (2)
JR-300	Drum Post Assy. (Ser. #3988 & Up)
JR-301	Drum Post Only (Ser. #3988 & Over)
JR-302	Drum Support Shaft (To Ser.#28942)
JR-302-1	Drum Support Shaft **Discontinued** (See JR-302-2 for replacement)
* JR-302-2	Drum Support Shaft
JR-303	Inner Drum Retaining Rod **Disc.** (See JR-302-2 for replacement)
JR-304-1	Drum Support Hex Bolt
JR-305-1	Inner Drum Ret. Set Screw **Disc.**
* JR-306	Inner Drum Retaining Knob
JR-401-5	Drum Complete (Serial #28943 & Up)
JR-404-2	Drum Hub
JR-404-1-A	Drum Hub Bearings
JR-408-1	Cable Clamp (Serial #28943 & Over)
* JR-409	Inner Drum Cage
* JR-410	Drum Connecting Cable
JR-430	Inner Drum & Distributor Tube Assy.

(*) Denotes Part Included in JR-430

CAT. NO.	DESCRIPTION
JR-500	Idler Arm Assembly Complete
JR-501	Idler Arm Only
JR-502	Idler Arm Bearing Shaft
JR-503	Idler Arm V-Belt Pulley
JR-504	Idler Arm Tension Pin
JR-505	Idler Arm Tension Pin Nut
JR-506	Idler Arm Tension Spring
JR-507	Idler Arm Tension Wing Nut
JR-508	Idler Arm Nut, Bolt & Washer
JR-600-6	Motor -1/3 hp - Comp. w/Foot Switch, GFI, & Reverse Switch Assembly
JR-601	Motor V-Belt Pulley
JR-601-C	Motor V-Belt (50") (Ser. #3988 & Up)
JR-602	Motor Support Bolts (Set of 4)
JR-603	Motor Support Washers (Set of 4)
JR-604	20 Ft. Cord with Plug and GFI
JR-610	Air Foot Switch & Rev. Switch Assy. (Serial #27903 & Over)
JR-610-A	Box with Cover Only
JR-610-B	Foot Pedal & Hose
JR-610-C	Cable Tie
JR-610-D	Foot Pedal Only
JR-610-E	Power Switch Diaphragm
JR-610-F	Air Hose
JR-610-G	Reverse Switch Only - 3-Way
JR-610-J	Barbed Adapter
JR-610-N	Strain Relief Nut
JR-SS-1	Slide-On Snakentainer (Not Shown)
JR-S1	Container Front with Spindle
JR-S2	Container Back
JR-S3	Collet Gripper
JR-S4	Spindle
JR-S5	Container Hub Casting
JR-S6	Container Support Shaft
GFI-JR	Ground Fault Interrupter for Jr.
JR-DECAL	Set of Safety Decals

General Wire Spring Co.

1101 Thompson Avenue 412/771-6300 McKees Rocks, PA 15136 U.S.A.

SEWEROOTER JUNIOR

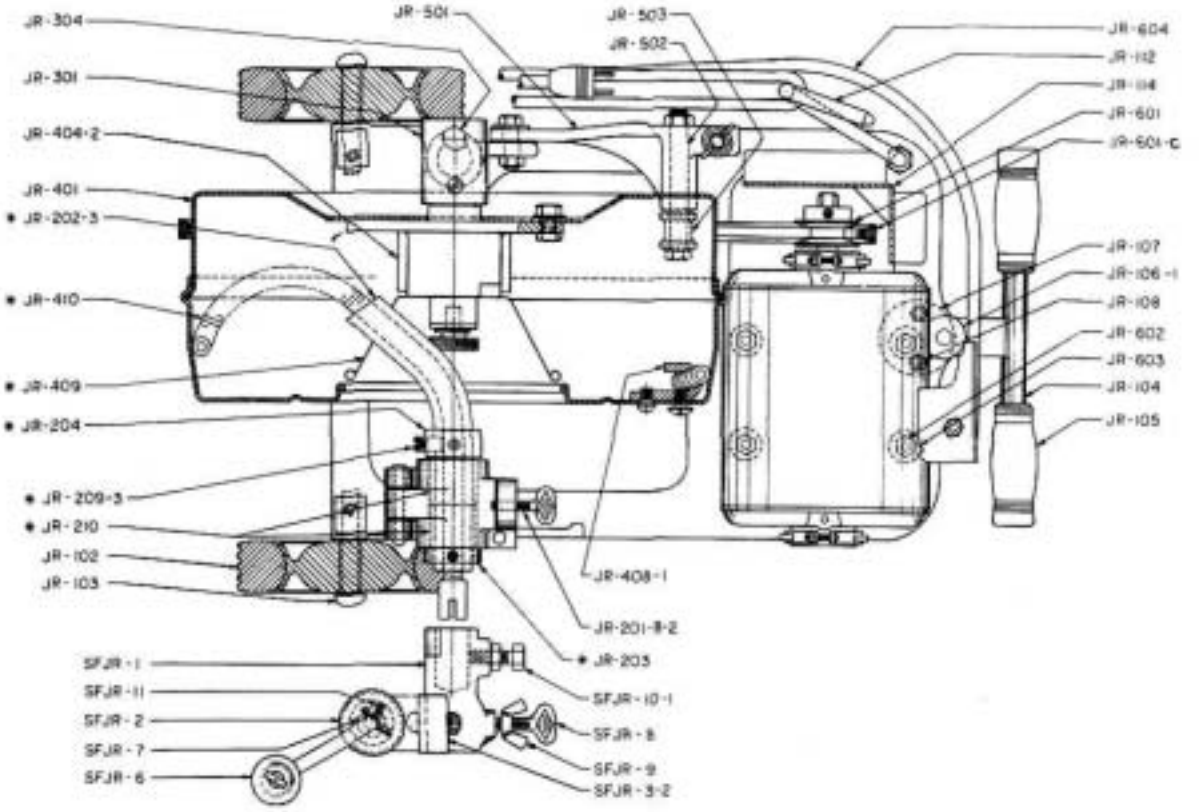

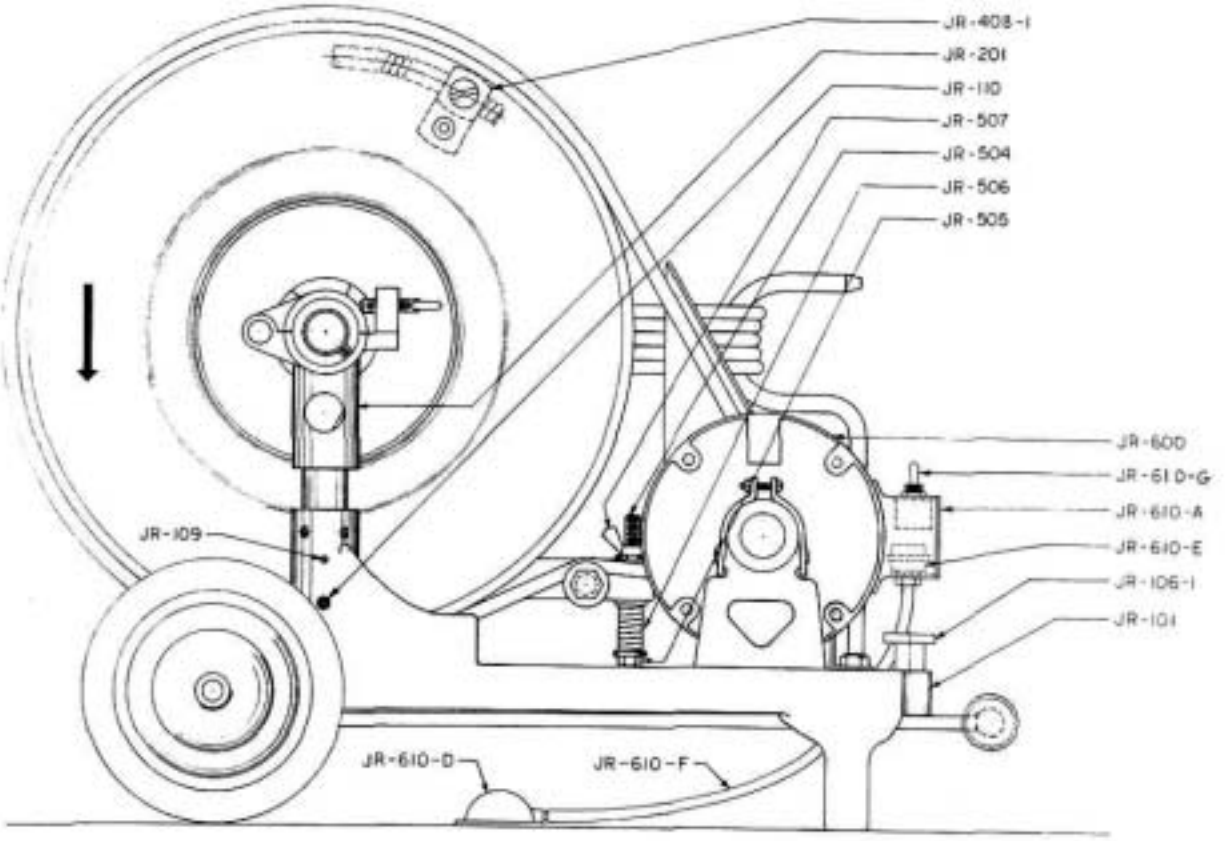

IMPORTANT: When ordering, give Serial Number of Machine